FIRST ANGLE PROJECTION

(ALL DIMENSIONS ARE IN "mm")

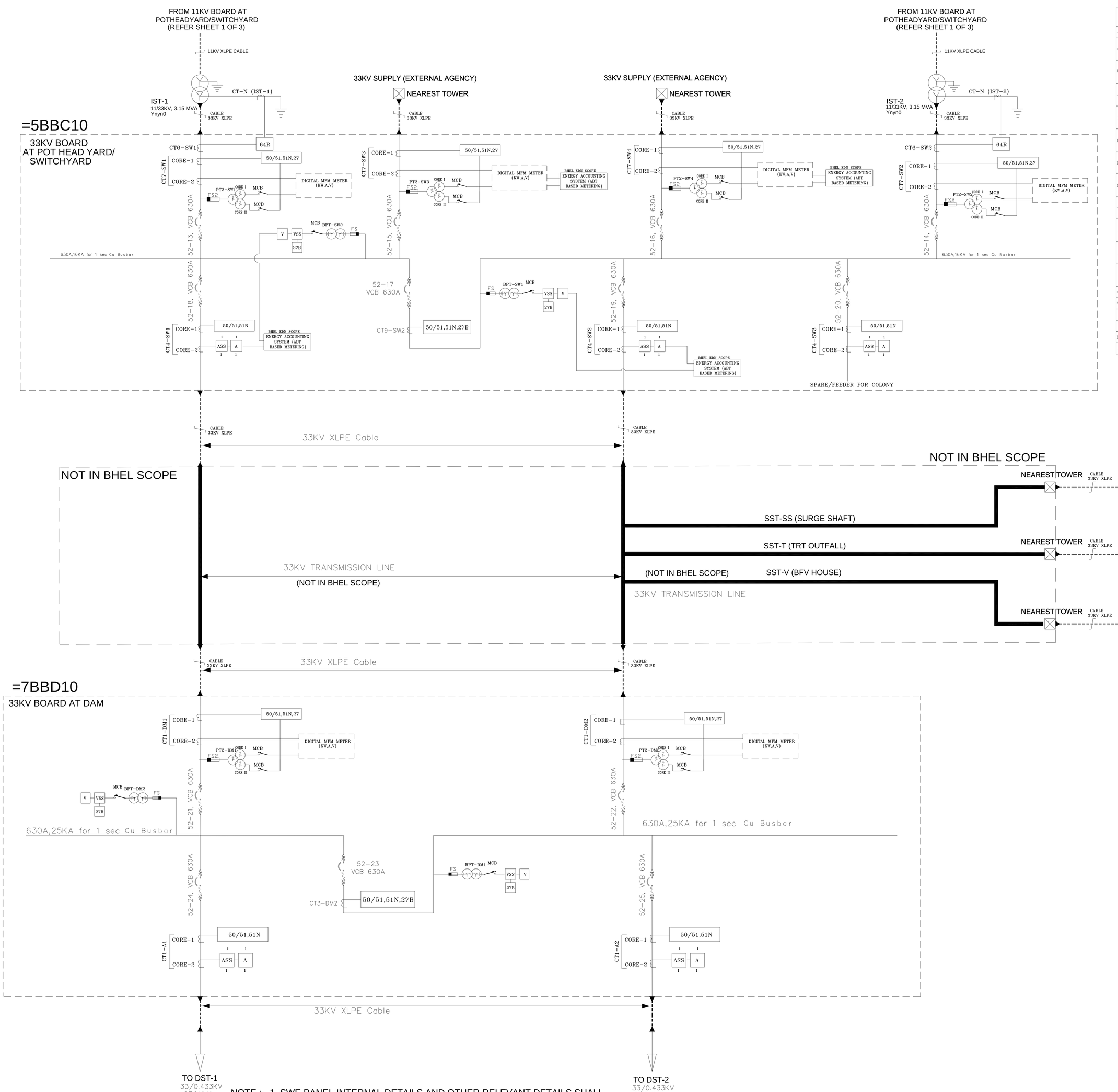

C.T. DETAILS :-

NO.	CIRCUIT		RATIO	ACC. CLASS	BURDEN VA
33 KV SYSTEM					
CT7-SW1	CORE-1	INST, IDMT & NEUTRAL O/C & U/V PROTN	100/1	5P20	10VA
	CORE-2	METERING	100/1	0.2	10VA
CT7-SW2	CORE-1	INST, IDMT & NEUTRAL O/C & U/V PROTN	100/1	5P20	10VA
	CORE-2	METERING	100/1	0.2	10VA
CT7-SW3	CORE-1	INST, IDMT & NEUTRAL O/C & U/V PROTN	100/1	5P20	10VA
	CORE-2	METERING	100/1	0.2	10VA
CT7-SW4	CORE-1	INST, IDMT & NEUTRAL O/C & U/V PROTN	100/1	5P20	10VA
	CORE-2	METERING	100/1	0.2	10VA
CT4-SW1	CORE-1	INST, IDMT & NEUTRAL O/C & U/V PROTN	100/1	5P20	10VA
	CORE-2	METERING	100/1	0.2	10VA
CT4-SW2	CORE-1	INST, IDMT & NEUTRAL O/C & U/V PROTN	100/1	5P20	10VA
	CORE-2	METERING	100/1	0.2	10VA
CT4-SW3	CORE-1	INST, IDMT & NEUTRAL O/C & U/V PROTN	100/1	5P20	10VA
	CORE-2	METERING	100/1	0.2	10VA
CT1-DM1	CORE-1	INST, IDMT & NEUTRAL O/C & U/V PROTN	100/1	5P20	10VA
	CORE-2	METERING	100/1	0.2	10VA
CT1-DM2	CORE-1	INST, IDMT & NEUTRAL O/C & U/V PROTN	100/1	5P20	10VA
	CORE-2	METERING	100/1	0.2	10VA
CT1-A1	CORE-1	INST, IDMT & NEUTRAL O/C & U/V PROTN	100/1	5P20	10VA
	CORE-2	METERING	100/1	0.2	10VA
CT1-A2	CORE-1	INST, IDMT & NEUTRAL O/C & U/V PROTN	100/1	5P20	10VA
	CORE-2	METERING	100/1	0.2	10VA
CT9-SW2		BUS INST, IDMT & NEUTRAL O/C & U/V PROTN	100/1	5P20	10VA
CT3-DM2		BUS INST, IDMT & NEUTRAL O/C & U/V PROTN	100/1	5P20	10VA
CT6-SW1		IST-1 REF. PROTN	100/1	PS	Vkp > 50 Rct + 25 V
CT-N (IST-1)		IST-1 REF. PROTN (NEUTRAL)	100/1	PS	Vkp > 50 Rct + 25 V
CT6-SW2		IST-2 REF. PROTN	100/1	PS	Vkp > 50 Rct + 25 V
CT-N (IST-2)		IST-2 REF. PROTN (NEUTRAL)	100/1	PS	Vkp > 50 Rct + 25 V

SYMBOLS :-

SYMBOLS	DESCRIPTION	SYMBOLS	DESCRIPTION
FS	FUSE		RELAY
	INDICATION LAMP		INDICATING METER
BPT	BUS POTENTIAL TRANSFORMER		RECORDING METER
CT	CURRENT TRANSFORMER	PT	LINE POTENTIAL TRANSFORMER
SS	SELECTOR SWITCH		VACUUM CIRCUIT BREAKER (VCB)
	DRAWOUT TERMINAL		
	MINIATURE CKT. BREAKER (MCB)		

LEGENDS :-

LEGEND	DESCRIPTION
A	AMMETER
ASS	AMMETER SELECTOR SWITCH
V	VOLTMETER
VSS	VOLTAGE SELECTOR SWITCH
MFM	MULTIFUNCTION METER
FS	FUSE
CT	CURRENT TRANSFORMER
PT	POTENTIAL TRANSFORMER
ACB	AIR CIRCUIT BREAKER
MCB	MINIATURE CIRCUIT BREAKER
SST	STATION SERVICE TRANSFORMER
SAT	STATION AUX. TRANSFORMER
AT	AMMETER TRANSDUCER
VT	VOLTAGE TRANSDUCER

RELAYS :-

DEVICE NO.	DESCRIPTION
27	UNDER VOLTAGE RELAY
27B	UNDERVOLTAGE RELAY (BUS)
50/51/51N	INST, IDMT & NEUTRAL O/C PROTN
64R	RESTRICTED EARTH FAULT PROTECTION

PT DETAILS:-

NO.	CIRCUIT		RATIO	ACC. CLASS	BURDEN VA
33 KV SYSTEM					
PT2-SW1	CORE-1	METERING	33KV/√3 / 110V/√3 / 110V/√3	0.2/3P	50VA
	CORE-2	PROTECTION		3P	50VA
PT2-SW2	CORE-1	METERING	33KV/√3 / 110V/√3 / 110V/√3	0.2/3P	50VA
	CORE-2	PROTECTION		3P	50VA
PT2-SW3	CORE-1	METERING	33KV/√3 / 110V/√3 / 110V/√3	0.2/3P	50VA
	CORE-2	PROTECTION		3P	50VA
PT2-SW4	CORE-1	METERING	33KV/√3 / 110V/√3 / 110V/√3	0.2/3P	50VA
	CORE-2	PROTECTION		3P	50VA
PT2-DM1	CORE-1	METERING	33KV/√3 / 110V/√3 / 110V/√3	0.2/3P	50VA
	CORE-2	PROTECTION		3P	50VA
PT2-DM2	CORE-1	METERING	33KV/√3 / 110V/√3 / 110V/√3	0.2/3P	50VA
	CORE-2	PROTECTION		3P	50VA
BPT-SW1		BUS METERING AND U/V PROTECTION	33KV/√3 / 110V/√3	0.2/3P	50VA
BPT-SW2		BUS METERING AND U/V PROTECTION	33KV/√3 / 110V/√3	0.2/3P	50VA
BPT-DM1		BUS METERING AND U/V PROTECTION	33KV/√3 / 110V/√3	0.2/3P	50VA
BPT-DM2		BUS METERING AND U/V PROTECTION	33KV/√3 / 110V/√3	0.2/3P	50VA

NOTE :- 1. SWE PANEL INTERNAL DETAILS AND OTHER RELEVANT DETAILS SHALL BE SHOWN IN SWE DRAWING BP-SWE-SWGR-98005-04 & BP-SWE-SWGR-98005-05.
2. CABLE SIZES SHALL BE FINALIZED DURING DETAIL ENGINEERING.
3. LENGTH OF 33KV CABLE FROM VCB 52-15 & VCB 52-16 TO THEIR RESPECTIVE NEAREST TOWERS SHALL BE MAX. 50 METERS.

REV.	DATE	ALTERED	
		CHECKED	
		APPROVED	

REV.	DATE	ALTERED	HA
01	20.11.19	CHECKED	SJ
		APPROVED	RMP

INCORPORATING COMPLIANCE TO CUSTOMER COMMENTS DATED :28.06.2019

	NAME	SIGN	DATE	NO. OF VAR.
DRWN	HA		08/05/2019	
CHKD	SJ		08/05/2019	
APPD	RMP		08/05/2019	

SUB-SUPPLIER / VENDOR

ADDITIONAL INFORMATION

STATUS OF DRAWING

DISTRIBUTION OF PRINTS

PROJECT: ARUN-3 HYDRO ELECTRIC PROJECT, NEPAL (4x 225 MW)

CUSTOMER: SJVN ARUN-3 POWER DEVELOPMENT COMPANY PVT. LTD. (SAPDC LTD.)

CONSULTANT: SJVN LIMITED (A JOINT VENTURE OF GOVT. OF INDIA & GOVT. OF HP)

CONTRACTOR: भारत हेवी इलेक्ट्रिकल्स लिमिटेड, भोपाल Bharat Heavy Electricals Limited, Bhopal

DEPT	HPE	UNTOL. DIMS. GR.	ANGLE	SCALE	WEIGHT(kg)	REF.TO ASSY.DRG.	ITEM NO.	NO.OF ITEMS
CODE	415			1:200				

TITLE: SINGLE LINE DIAGRAM FOR MV SYSTEM (33KV)

DRAWING NO. 32924170001 REV. 01

SHEET NO. 02 NO. OF SHEETS. 03

A1 SIZE

THE INFORMATION ON THIS DOCUMENT IS THE PROPERTY OF BHARAT HEAVY ELECTRICALS LIMITED.
IT MUST NOT BE USED DIRECTLY OR INDIRECTLY IN ANY WAY DETRIMENTAL TO THE INTEREST OF THE COMPANY.

REF. DRG. NO. | SIGN. & DATE | INVENTORY NO.